# Oakmont Single Handle Tub and Shower Faucet

## Specifications

| | |
|---|---|
| **Handle** | Zinc handle, 1/4 quarter turn stop |
| **Tub Spout** | Slip fit tub spout |
| **Escutcheon** | Stainless Steel material, with Laser H&C letters |
| **Cartridge** | Ceramic cartridge |
| **Valve kits** | Pressure balance valve kits with water stop and brass plug |
| **Shower head** | Single function ABS showerhead, WaterSense® Showerhead |
| **Shower arm** | Brass |
| **Max Waterflow** | 2.0 GPM@ 80 PSI |
| **Min Water flow** | 1.5 GPM@45 PSI |

## Dimensions

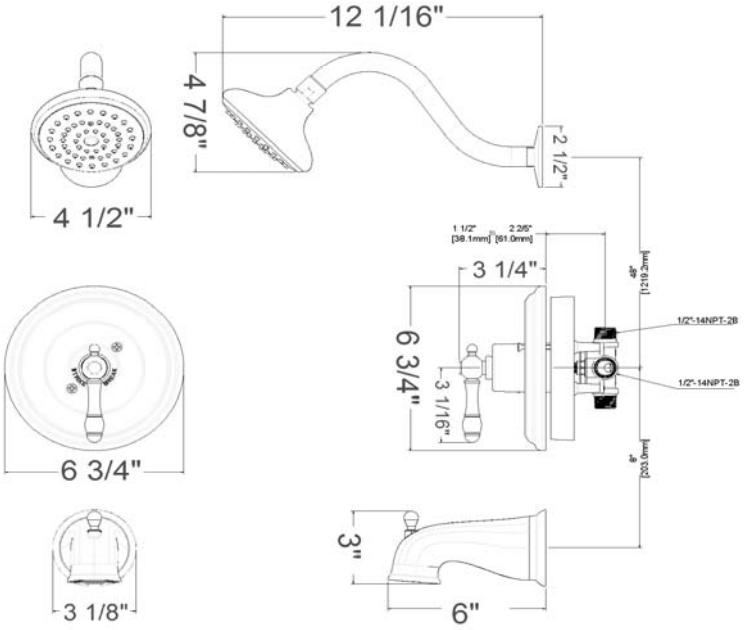


## Warranty & Compliances

| | |
|---|---|
| **Warranty** | Lifetime Limited Warranty, Lifetime Limited Finish Warranty |
| **IAPMO/UPC** | CUPC compliant |
| **ASME** | ASME A112.18.1/ CSA B125.1 |
| **ADA** | Compliant |
| **WaterSense** | WaterSense® Showerhead |

## Order Codes & Finishes/Colors

| | | |
|---|---|---|
| **Oil Rubbed Bronze (US10B)** | **523456** | TRU MATCH |
| **Satin Nickel (US15)** | **523464** | TRU MATCH |

**Type:**
**Job:**
**Order Code:**
**Approvals:**

Design House reserves the right to make changes in materials, specifications & models at any time. Design House also reserves the right to discontinue product without notice or obligation.