Installation Manual

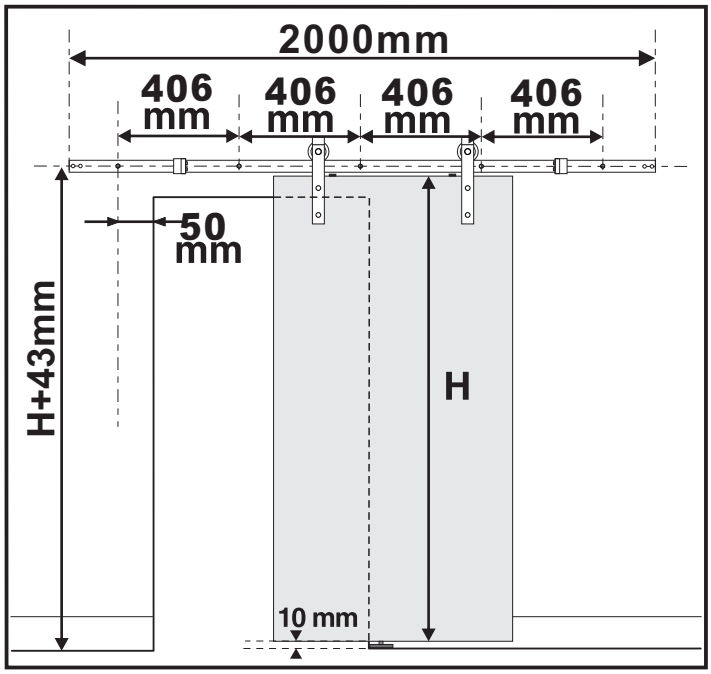

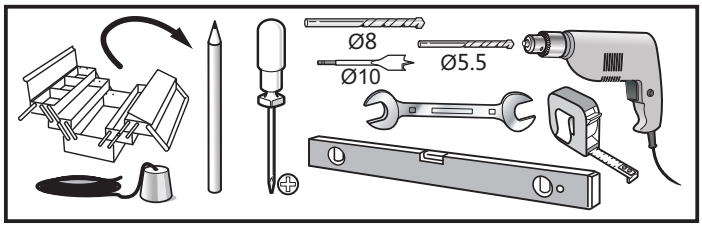

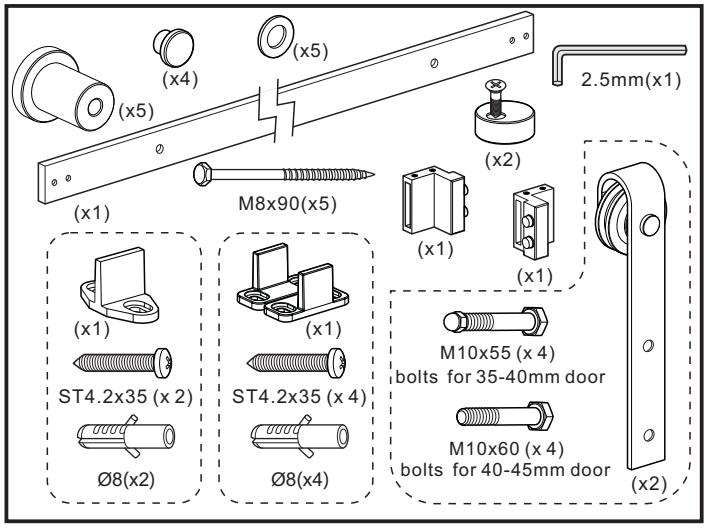

1

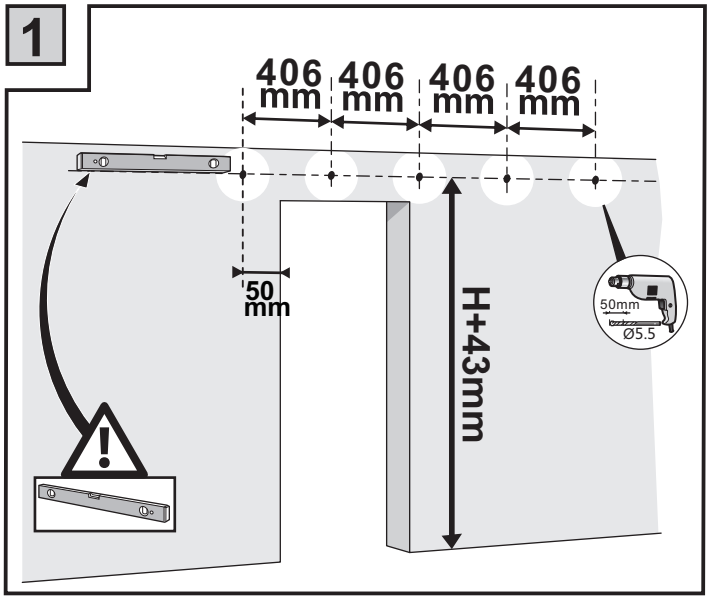

3

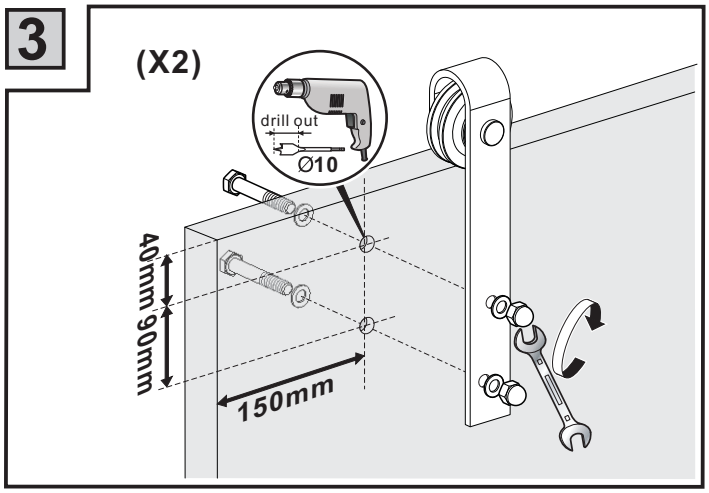

2

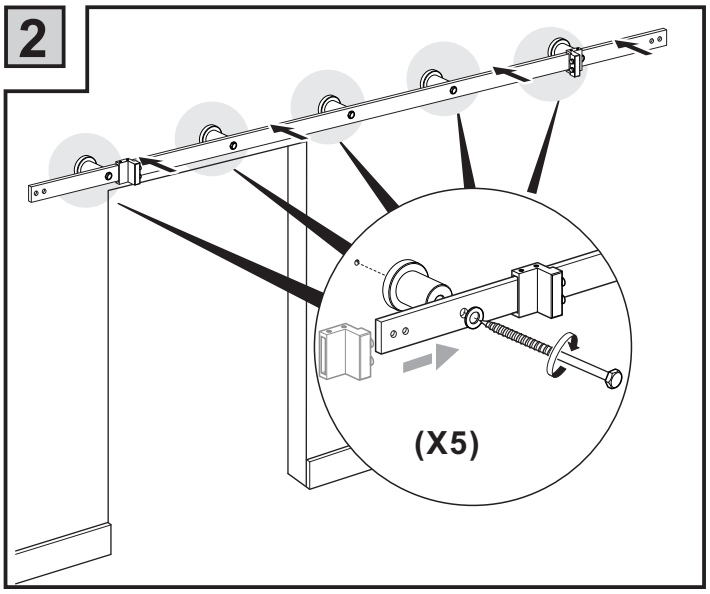

4

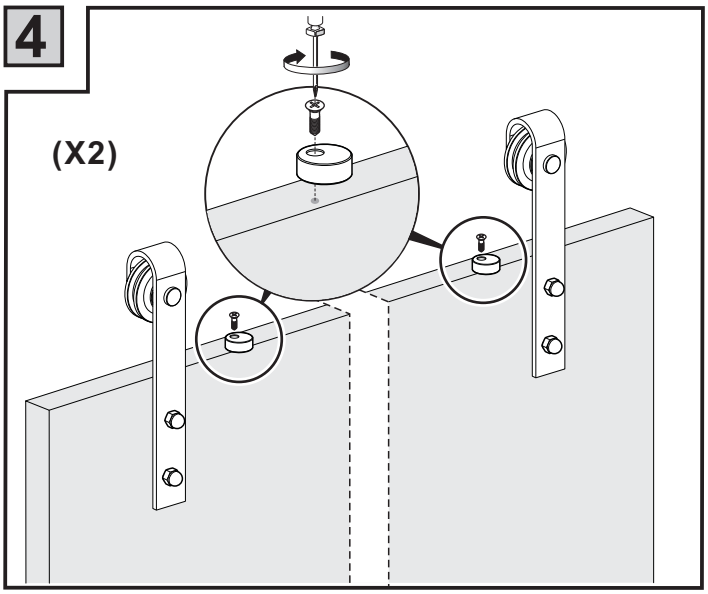

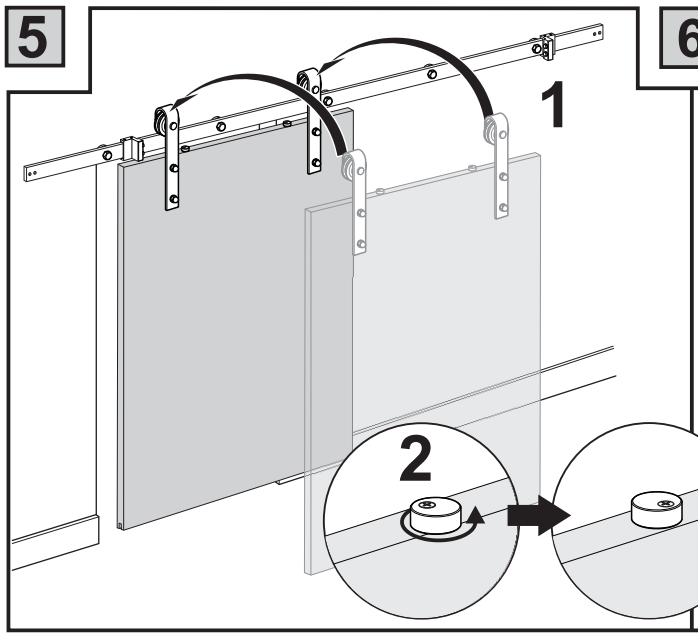
5
1
2

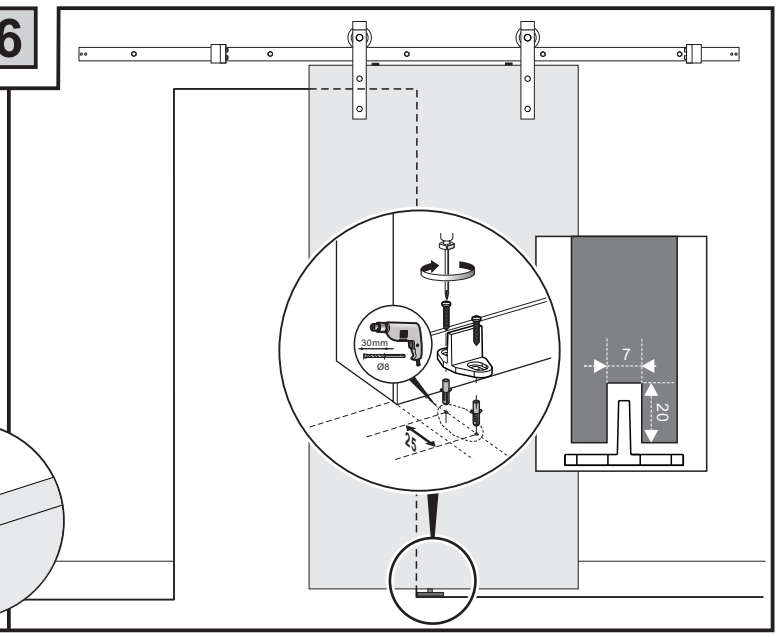
6
30mm
Ø8
7
20

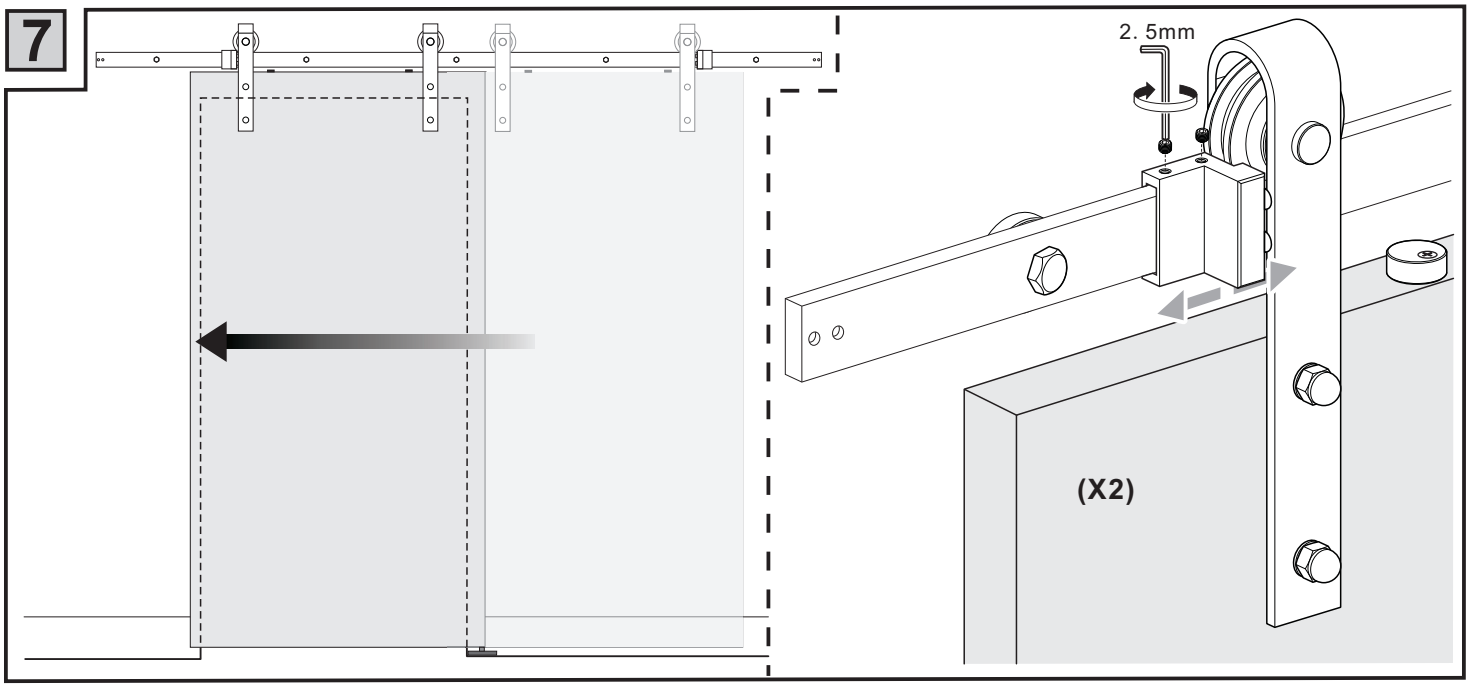
7
2. 5mm
(X2)

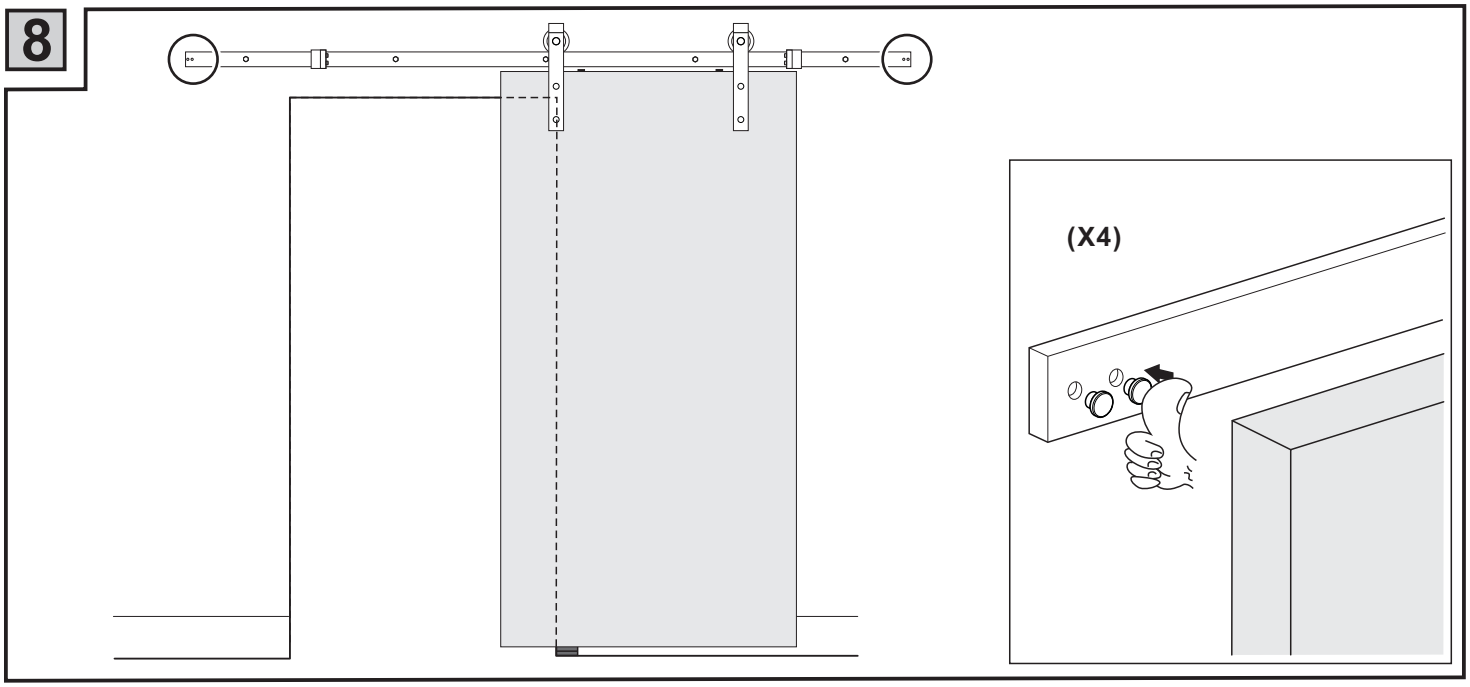
8
(X4)